1-800-BOLLARDS

The Bollard Experts

REVISIONS			
LTR	DESCRIPTION	DATE	APPVD

COMMENTS

SPECIFICATIONS

HEIGHT: 36"
DIAMETER: 8.625"
WALL THICKNESS: 0.500"

- ☐ SELECT DESIRED MATERIAL: (8" NOMINAL SIZE)
  - ☐ RCST08080 SCH 80 STAINLESS STEEL
  - ☐ RCST08080 SCH 80 ASTM A-53 CARBON STEEL
- ☐ SELECT DESIRED STAINLESS STEEL BOLLARD FINISH:
  - ☐ POLISHED #4 FINISH
  - ☐ AS SPECIFIED _____
- ☐ SELECT DESIRED CARBON STEEL BOLLARD FINISH:
  - ☐ POWDER COAT RAL # _____
  - ☐ AS SPECIFIED _____
- ☐ SELECT DESIRED STAINLESS STEEL BOLLARD MATERIAL:
  - ☐ TYPE 304
  - ☐ TYPE 316
- ☐ SELECT DESIRED BOLLARD CAP STYLE:
  - ☐ DOME
  - ☐ STANDARD FLAT
  - ☐ REVEAL
  - ☐ SLOPED

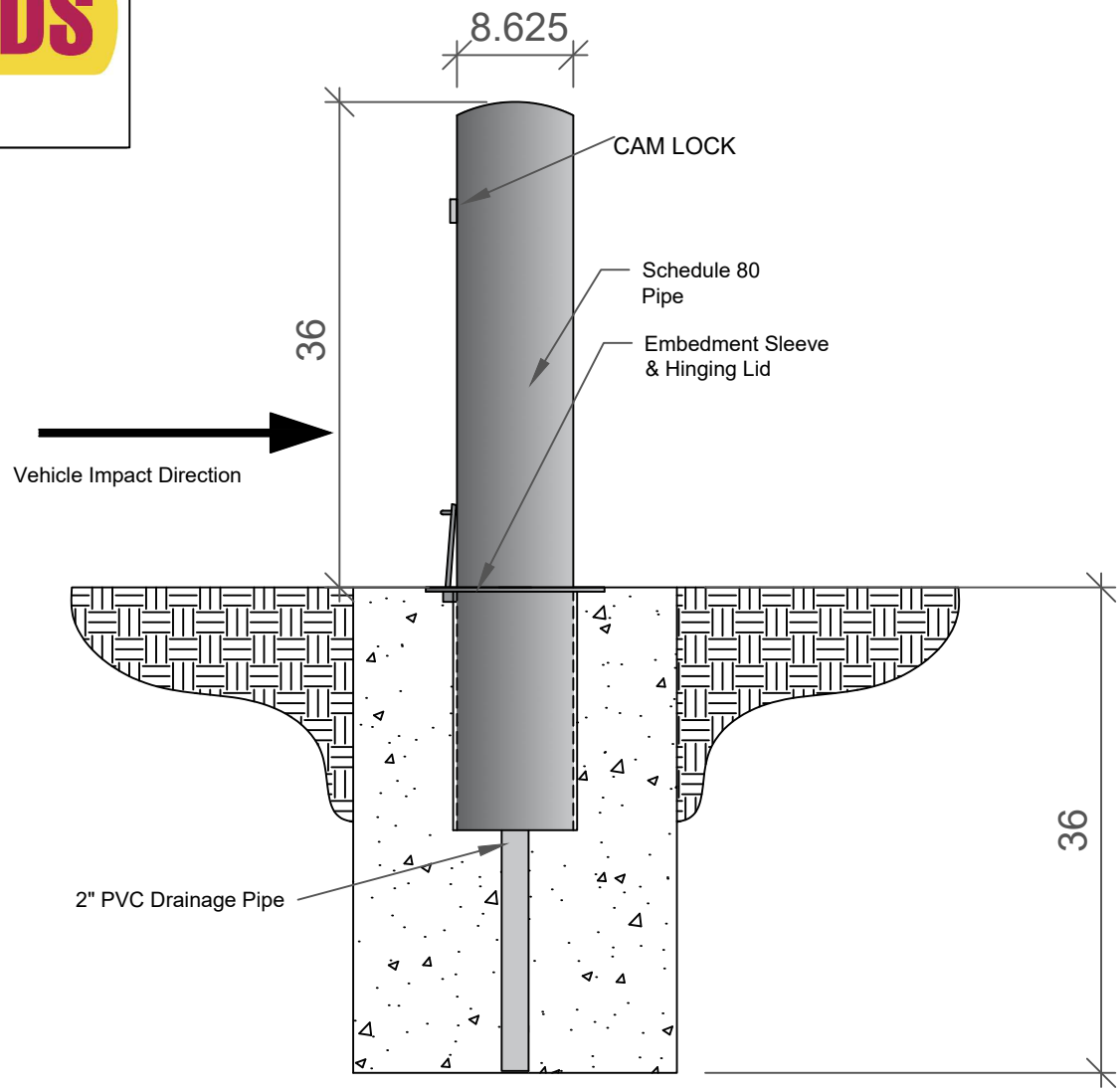

END VIEW-FOUNDATION

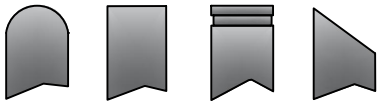

APPLICATION	
NEXT ASSY	USED ON

SERIES NUMBER:	XX-S060-XX	CAGE CODE: 6NQJ8 / SIZE:	DRAWING NUMBER: 8" CT REMOVABLE
PRODUCT FAMILY:	30 MPH CRASH TESTED		
PRODUCT CLASS:	STANDARD OR CUSTOMER DEFINED	DRAWN BY: AJA	DRAWING REV:
PRODUCT LINE:	BOLLARD	CHECKED BY:	SHEET: 1 OF 1
PRODUCT SUB LINE:	REMOVABLE	APPROVED BY:	RELEASE DATE:

1-800-BOLLARDS, Inc.
10 Hughes Suite A105
Irvine, CA 92618
PHONE: 1-800-BOLLARDS
WEB: WWW.1800BOLLARDS.COM
EMAIL: INFO@1800BOLLARDS.COM

TITLE: BOLLARD, CT REMOVABLE

NOTES:
1. INSTALLATION TO BE COMPLETED IN ACCORDANCE WITH MANUFACTURER'S SPECIFICATIONS.
2. DO NOT SCALE DRAWING.
3. THIS DRAWING IS INTENDED FOR USE BY ARCHITECTS, ENGINEERS, CONTRACTORS, CONSULTANTS AND DESIGN PROFESSIONALS FOR PLANNING AND INSTALLATION PURPOSES
4. ALL INFORMATION CONTAINED HEREIN WAS CURRENT AT THE TIME OF DEVELOPMENT BUT MUST BE REVIEWED AND APPROVED BY THE PRODUCT MANUFACTURER TO BE CONSIDERED ACCURATE.

1-800-BOLLARDS

The Bollard Experts

REVISIONS			
LTR	DESCRIPTION	DATE	APP

COMMENTS

SPECIFICATIONS

HEIGHT: 36"
DIAMETER: 8.625"
WALL THICKNESS: 0.500"

- ☐ SELECT DESIRED MATERIAL: (8" NOMINAL SIZE)
  - ☐ RCST08080 SCH 80 STAINLESS STEEL
  - ☐ RCST08080 SCH 80 ASTM A-53 CARBON STEEL
- ☐ SELECT DESIRED STAINLESS STEEL BOLLARD FINISH:
  - ☐ POLISHED #4 FINISH
  - ☐ AS SPECIFIED _____
- ☐ SELECT DESIRED CARBON STEEL BOLLARD FINISH:
  - ☐ POWDER COAT RAL # _____
  - ☐ AS SPECIFIED _____
- ☐ SELECT DESIRED STAINLESS STEEL BOLLARD MATERIAL:
  - ☐ TYPE 304
  - ☐ TYPE 316
- ☐ SELECT DESIRED BOLLARD CAP STYLE:
  - ☐ DOME
  - ☐ STANDARD FLAT
  - ☐ REVEAL
  - ☐ SLOPED

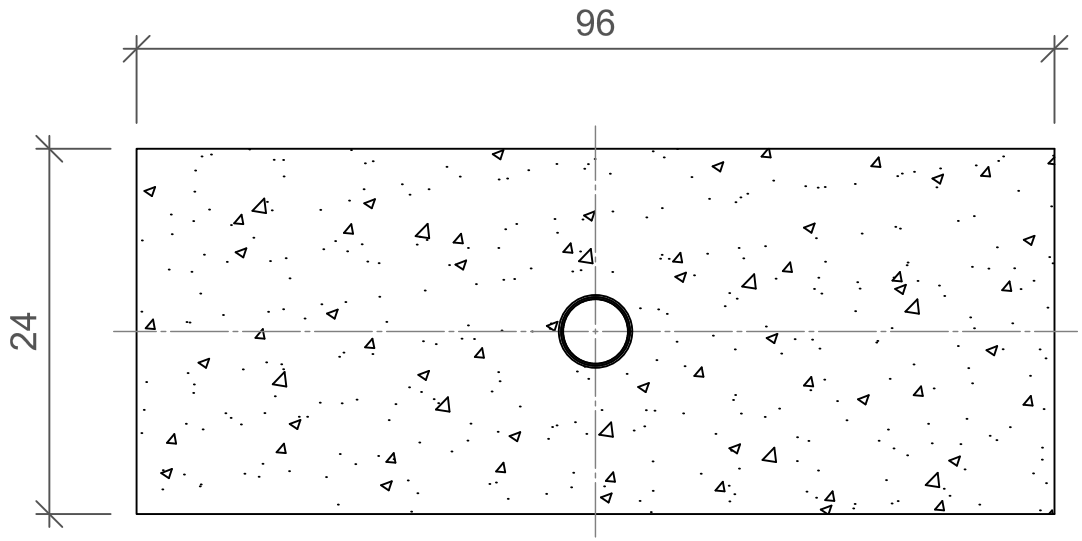

PLAN VIEW-FOUNDATION

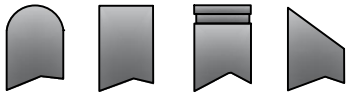

APPLICATION	
NEXT ASSY	USED ON

SERIES NUMBER:	XX-S060-XX	CAGE CODE: 6NQJ8	SIZE:	DRAWING NUMBER: 8" CT REMOVABLE
PRODUCT FAMILY:	30 MPH CRASH TESTED			
PRODUCT CLASS:	STANDARD OR CUSTOMER DEFINED	DRAWN BY: AJA		DRAWING REV:
PRODUCT LINE:	BOLLARD	CHECKED BY:		SHEET: 1 OF 1
PRODUCT SUB LINE:	REMOVABLE	APPROVED BY:		RELEASE DATE:

1-800-BOLLARDS, Inc.
10 Hughes Suite A103
Irvine, CA 92618
PHONE: 1-800-BOLLARDS
WEB: WWW.1800BOLLARDS.COM
EMAIL: INFO@1800BOLLARDS.COM

TITLE: BOLLARD, CT REMOVABLE

NOTES:
1. INSTALLATION TO BE COMPLETED IN ACCORDANCE WITH MANUFACTURER'S SPECIFICATIONS.
2. DO NOT SCALE DRAWING.
3. THIS DRAWING IS INTENDED FOR USE BY ARCHITECTS, ENGINEERS, CONTRACTORS, CONSULTANTS AND DESIGN PROFESSIONALS FOR PLANNING AND INSTALLATION PURPOSES
4. ALL INFORMATION CONTAINED HEREIN WAS CURRENT AT THE TIME OF DEVELOPMENT BUT MUST BE REVIEWED AND APPROVED BY THE PRODUCT MANUFACTURER TO BE CONSIDERED ACCURATE.

1-800-BOLLARDS

The Bollard Experts

REVISIONS			
LTR	DESCRIPTION	DATE	APPVD

COMMENTS

SPECIFICATIONS

HEIGHT: 36"
DIAMETER: 8.625"
WALL THICKNESS: 0.500"

- ☐ SELECT DESIRED MATERIAL: (8" NOMINAL SIZE)
  - ☐ RCST08080 SCH 80 STAINLESS STEEL
  - ☐ RCST08080 SCH 80 ASTM A-53 CARBON STEEL
- ☐ SELECT DESIRED STAINLESS STEEL BOLLARD FINISH:
  - ☐ POLISHED #4 FINISH
  - ☐ AS SPECIFIED _____
- ☐ SELECT DESIRED CARBON STEEL BOLLARD FINISH:
  - ☐ POWDER COAT RAL # _____
  - ☐ AS SPECIFIED _____
- ☐ SELECT DESIRED STAINLESS STEEL BOLLARD MATERIAL:
  - ☐ TYPE 304
  - ☐ TYPE 316
- ☐ SELECT DESIRED BOLLARD CAP STYLE:
  - ☐ DOME
  - ☐ STANDARD FLAT
  - ☐ REVEAL
  - ☐ SLOPED

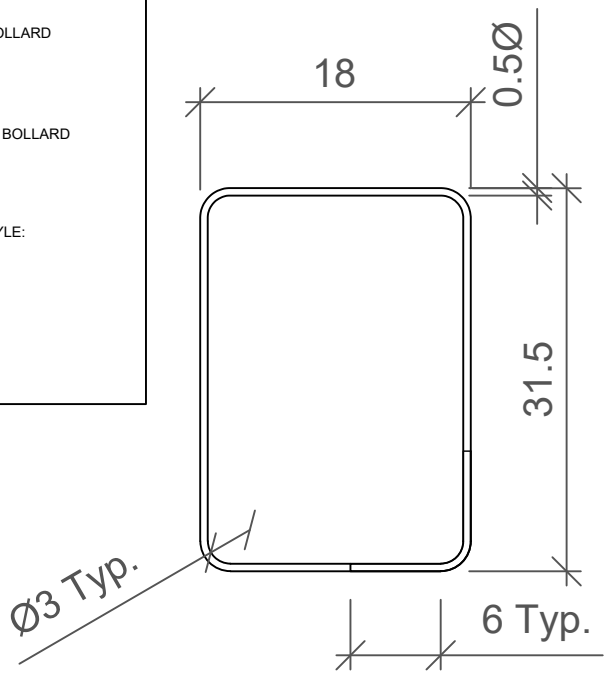

31 1/2" x 18" Stirrup

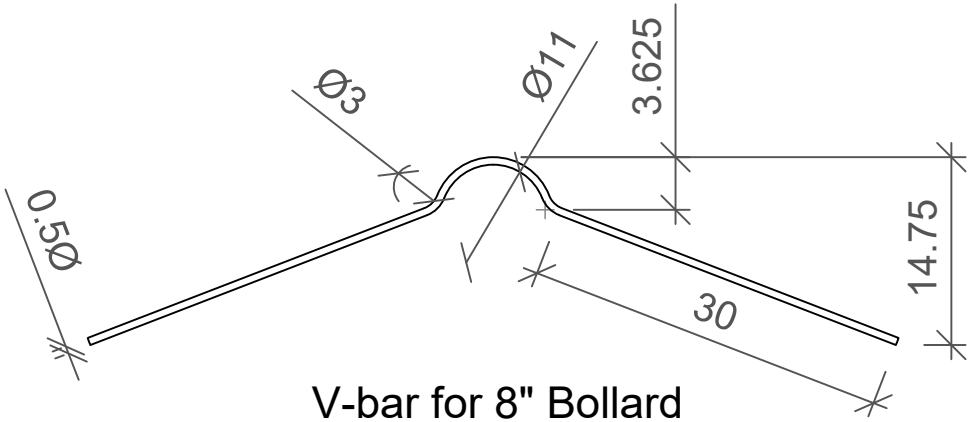

V-bar for 8" Bollard

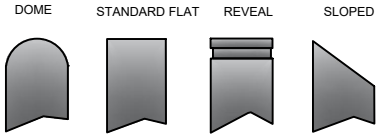

APPLICATION	
NEXT ASSY	USED ON

SERIES NUMBER:	XX-S060-XX	CAGE CODE: 6NQJ8 / SIZE:	DRAWING NUMBER: 8" CT REMOVABLE
PRODUCT FAMILY:	30 MPH CRASH TESTED		
PRODUCT CLASS:	STANDARD OR CUSTOMER DEFINED	DRAWN BY: AJA	DRAWING REV:
PRODUCT LINE:	BOLLARD	CHECKED BY:	SHEET: 1 OF 1
PRODUCT SUB LINE:	REMOVABLE	APPROVED BY:	RELEASE DATE:

1-800-BOLLARDS, Inc.
10 Hughes Suite A105
Irvine, CA 92618
PHONE: 1-800-BOLLARDS
WEB: WWW.1800BOLLARDS.COM
EMAIL: INFO@1800BOLLARDS.COM

TITLE: BOLLARD, CT REMOVABLE

NOTES:
1. INSTALLATION TO BE COMPLETED IN ACCORDANCE WITH MANUFACTURER'S SPECIFICATIONS.
2. DO NOT SCALE DRAWING.
3. THIS DRAWING IS INTENDED FOR USE BY ARCHITECTS, ENGINEERS, CONTRACTORS, CONSULTANTS AND DESIGN PROFESSIONALS FOR PLANNING AND INSTALLATION PURPOSES
4. ALL INFORMATION CONTAINED HEREIN WAS CURRENT AT THE TIME OF DEVELOPMENT BUT MUST BE REVIEWED AND APPROVED BY THE PRODUCT MANUFACTURER TO BE CONSIDERED ACCURATE.